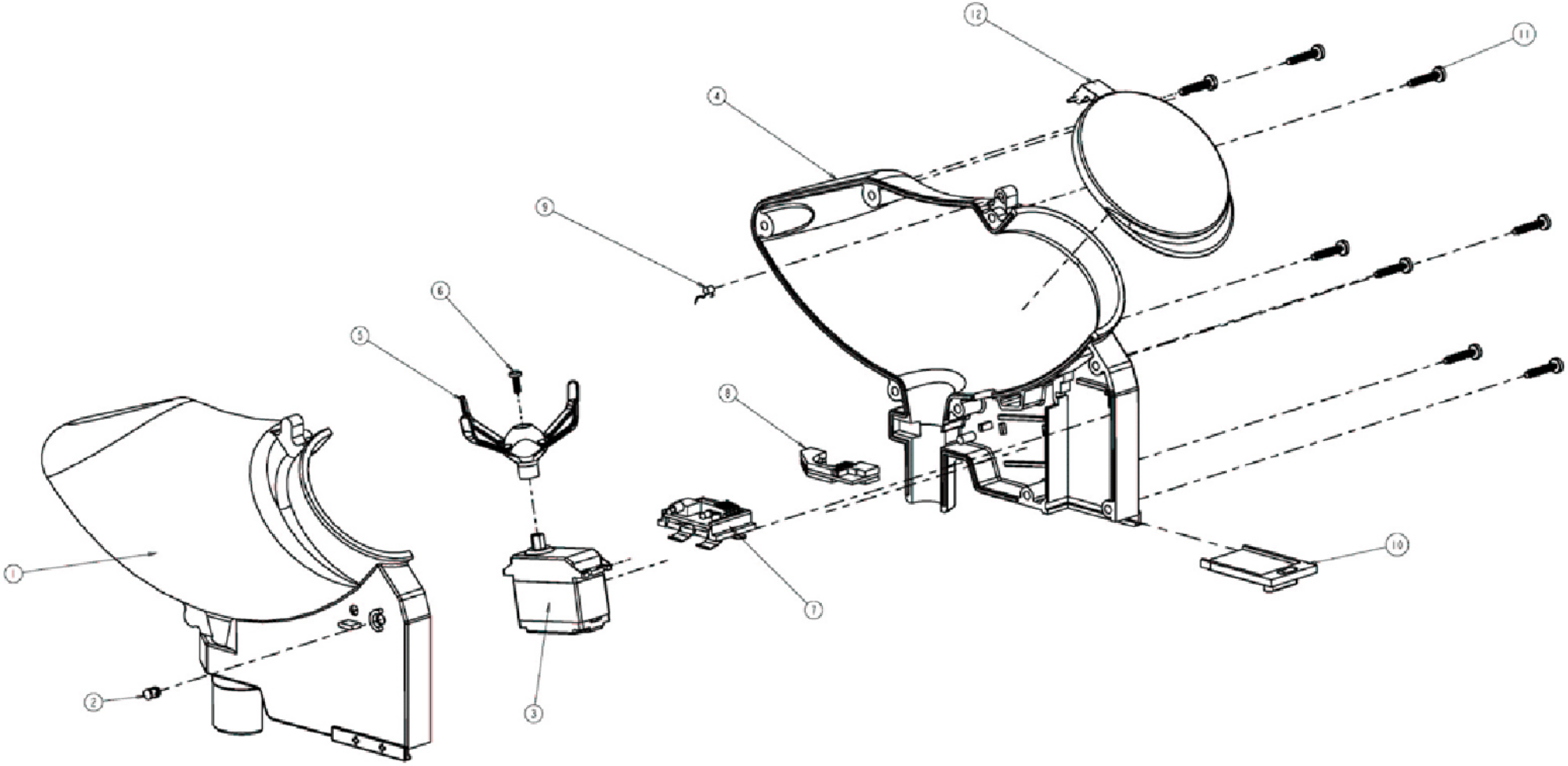

revolution